5 200417 800100 >

Solcore®

Electric Tankless Water Heaters



Electric Instantaneous Water Heater

K9 (INVERTER)

4 in 1
SMART POWER

10 Years non-corrosion Warranty

0% Άλατα

ECO

Installation Instructions & User's Manual

SOLCORE after many years of research, offers you unique Instantaneous Electric Water Heaters, with advanced European technology.

SOLCORE is targeting to superior quality with the best price, ease of use and energy saving, taking care always to be environmentally friendly.

Thank you for choosing **SOLCORE Instantaneous Electric Water Heaters**.

Read the installation instructions and user's manual of the device with care.

If you have any questions about the product please contact us.

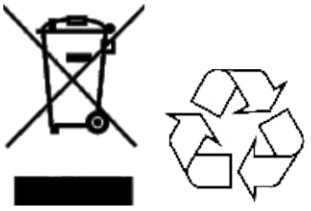

Tel: +30 2310 923130

Fax: +30 2310 923131

e_mail: info@solcore.eu

Package Contents

1) Instant Water Heater



2) Triple spray shower handle



3) stainless steel shower hose



4) Water flow regulator



5) Set of three (3) mounting screws & plastic plugs



6) Set of cable gand & screws



Warning

- This appliance can be used by children aged from 8 years and above and persons with reduced physical, sensory or mental capabilities or lack of experience and knowledge if they have been given supervision or instruction concerning use of the appliance in a safe way and understand the hazards involved. Children shall not play with the appliance. Cleaning and user maintenance shall not be made by children without supervision.
- Means for disconnection must be incorporated in the fixed wiring in accordance with the wiring rules.
- A disconnection incorporated in the fixed wiring is to be provided
- If the supply cord is damaged, it must be replaced by the manufacturer, its service agent or similarly qualified persons in order to avoid a hazard.
- **WARNING:** Do not switch on if there is a possibility that the water in the heater is frozen.
- The outlet must not be connected to any tap or fitting other than those specified.
- The conductors of cables to fixing wiring shall have a nominal cross-sectional areas at least 4.0mm².

	Correct disposal of this product
	**This symbol on the product, or in its packaging, indicates that this product may not be treated as household waste. Instead, it should be taken to the appropriate waste collection point for the recycling of electrical and electronic equipment. By ensuring this product is disposed of correctly, you will help prevent potential negative consequences for the environment and human health, which could otherwise be caused by the inappropriate waste handling of this product. For more detailed information about the recycling of this product, please contact your local council, your household waste disposal service, or the shop where you purchased the product.**

- Manual could be download from Official website.

Notices

Safety Attention

- **The installation must be in compliance with the National Electrical Code, your local electrical and plumbing codes.**
- **The instant water heater must be EARTHED.**
- **All wiring and installation must be supervised by a qualified electrician.**
- Check the flow capacity of the electric wire before installation.
- Install the anti-leakage air switch, and turn it off when not using the water heater.
- Assemble the water heater to the area free of frost.
- Forbid to power on if there is any freeze.
- Check first if the water comes out or not from the water heater when new installation and long time no working, then power on.
- Must not install near combustible, should be installed vertically. Discharge the dust inside the tube before connecting the power.
- Forbid to use the water heater for multi-channel water supply. Turn off the inlet valve when out of service for long period.
- Power the water heater off when there is any thunderstorm.
- The professional should maintain the water heater with exclusive fittings when any damage.

- Adjust the inlet valve and keep the water yield correctly. Please decrease the water flow to increase the water temperature while the water temperature is not enough although with the highest work gear.
- Who with poor health, slow-witted and mental disorder are not allowed to use the water heater unless with help.
- To prevent freeze, please evacuate the water inside the tube when out of service for long period.
- Install the strainer and descale the water heater regularly in case of any debris.
- Please check the water temperature carefully before use in case of scald.

Electrical Diagram

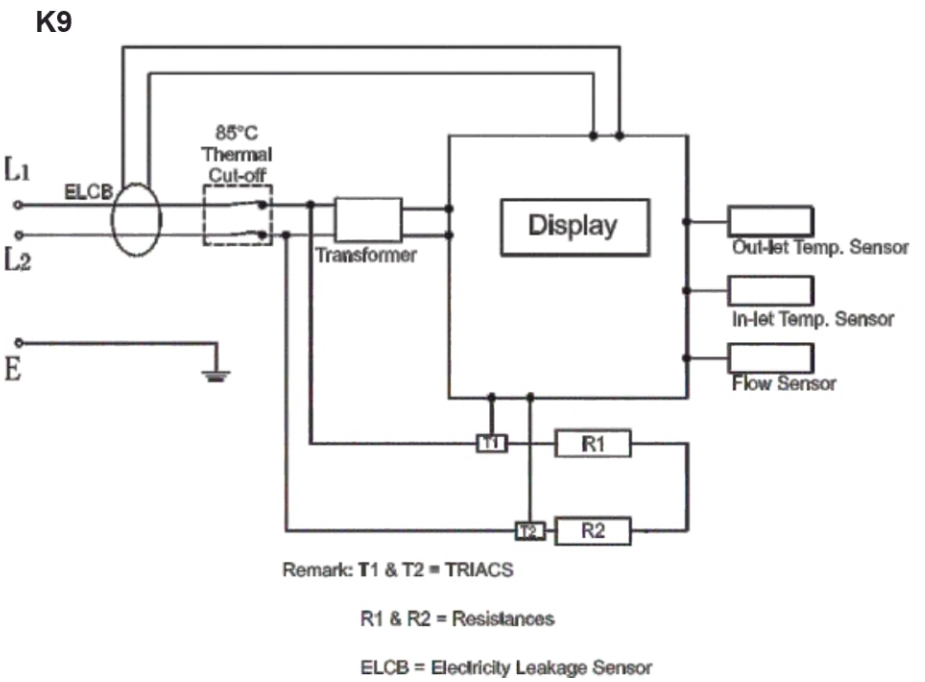

Electrical Installation

- Open the front cover of the device by removing the two screws and lifting it carefully (Pic1 & Pic2).
- Connect the device with the mains power supply by choosing the suitable power cord and air breaker switch according to the technical table on page 6.
- After the power cord is passed through the rubber sealant (Pic3) then it can be bend on one of the three different slotting points of the TOP, LEFT and RIGHT sides of the device by breaking the plastic thin membranes (Pic4).
- The end terminals of the power cord have to be connected to the terminal block with the right order, (L)ive, (⏚)earth and (N)eutral, and the rest cable has to be fixed well with the gand (Pic5 & Pic6). **Before mounting the device connect the flow regulating valve on the water in-let.*

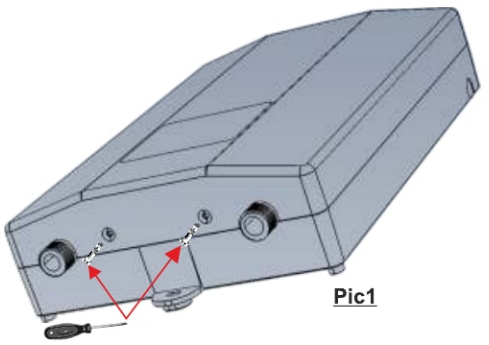

Pic1

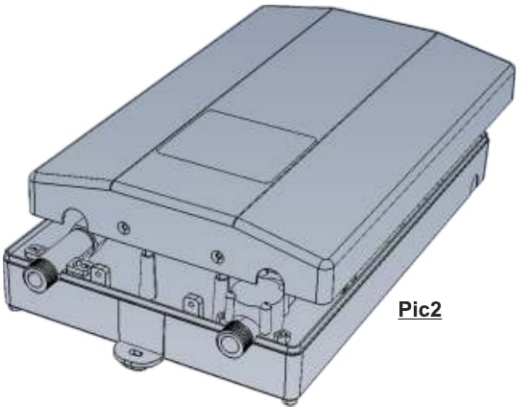

Pic2

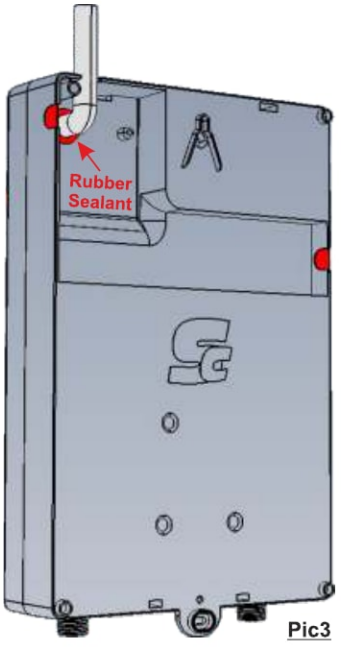

Pic3

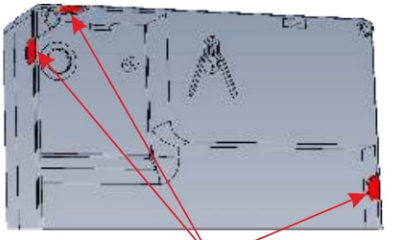

Pic4

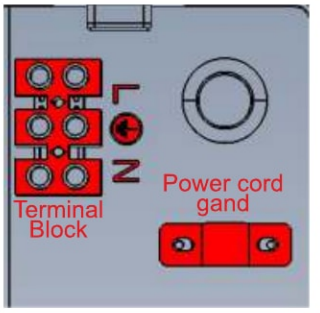

Pic5

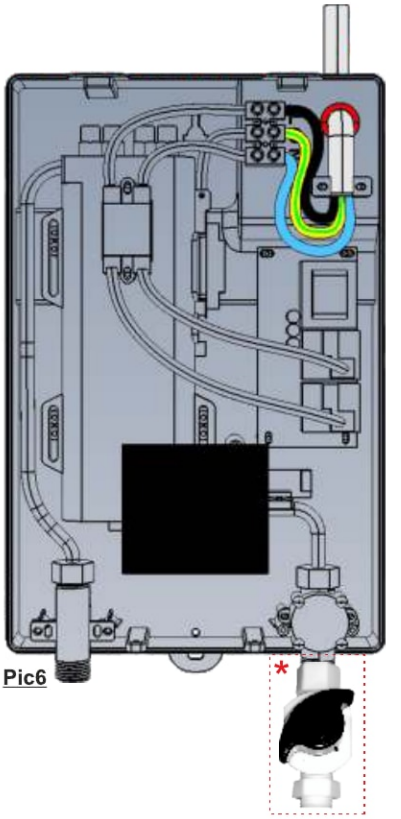

Pic6

Mounting Method

- You need to use the two screws and the two plastic plugs that are provided with the device packaging. A Φ8mm drill is required for the right holes.
- Choose the position of the water heater on the wall and open the first hole for the top screw. Insert firmly the plastic plug and then fix the screw leaving 6mm - 8mm gap between the mounting surface and the screw head.
- Mount the device on the screw and level it vertically towards the floor and mark the drilling point for the bottom hole.
- Open the second hole for the bottom screw, insert firmly the plastic, mount the device from the top screw and fix tightly with the second screw the device on the mounting surface. Make sure the device wont move in any direction.

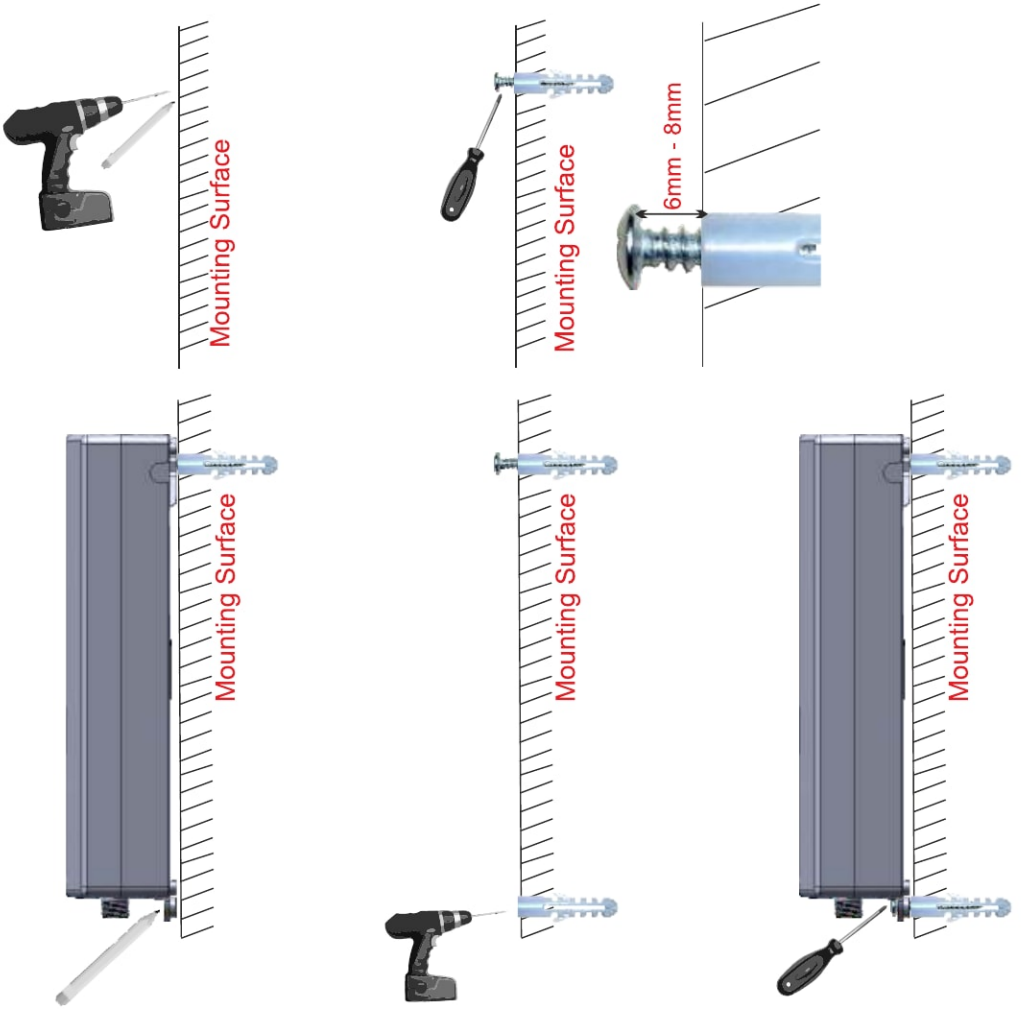

Technical Table

Model	K9
Rated Voltage	220V - 240V~ 50Hz
Rated Power	9.0kW @ 230V~ 50Hz
Rated Current	40A @ 230V~ 50Hz
Power cord cross section @ 9.0kW	3*6.0mm²
Rated Pressure	0.05MPa - 0.6 MPa (*1.0Mpa max tested*)
Min. Air Switch	≥40Amps
Required Electric Meter	40Amps
IP Class	IP25
Temperature Setting	25°C - 55°C
Overheat Protection	60°C
Thermal Cut-out	95°C
In-let & Out-let Section	G1/2" Male
Min activation flow rate	1.2 - 1.5 L/min
Max water flow rate	6.0 L/min
Product Size	378*235*80mm

Installation Types

Open-Type



Close-type (multi-point)

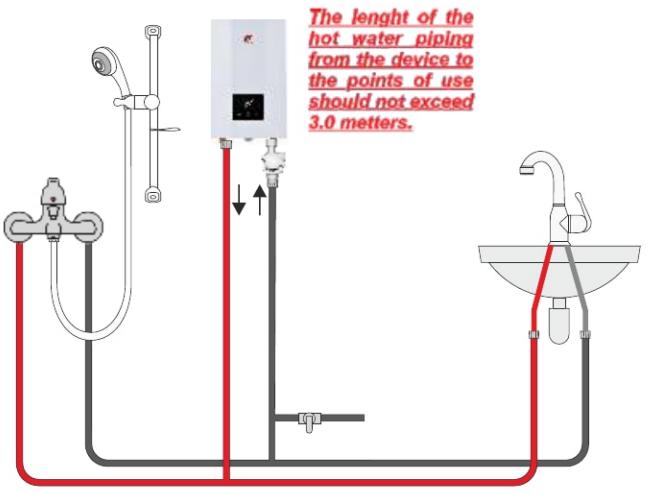

The lenght of the hot water piping from the device to the points of use should not exceed 3.0 metters.

Hybrid Connection

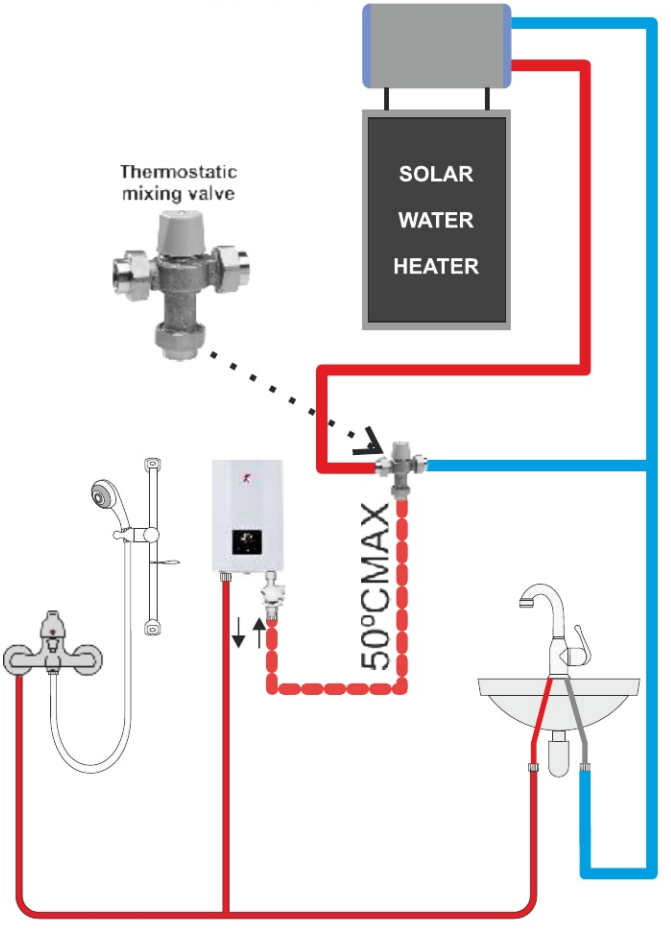

Display Indicators & Touch Keys Functions

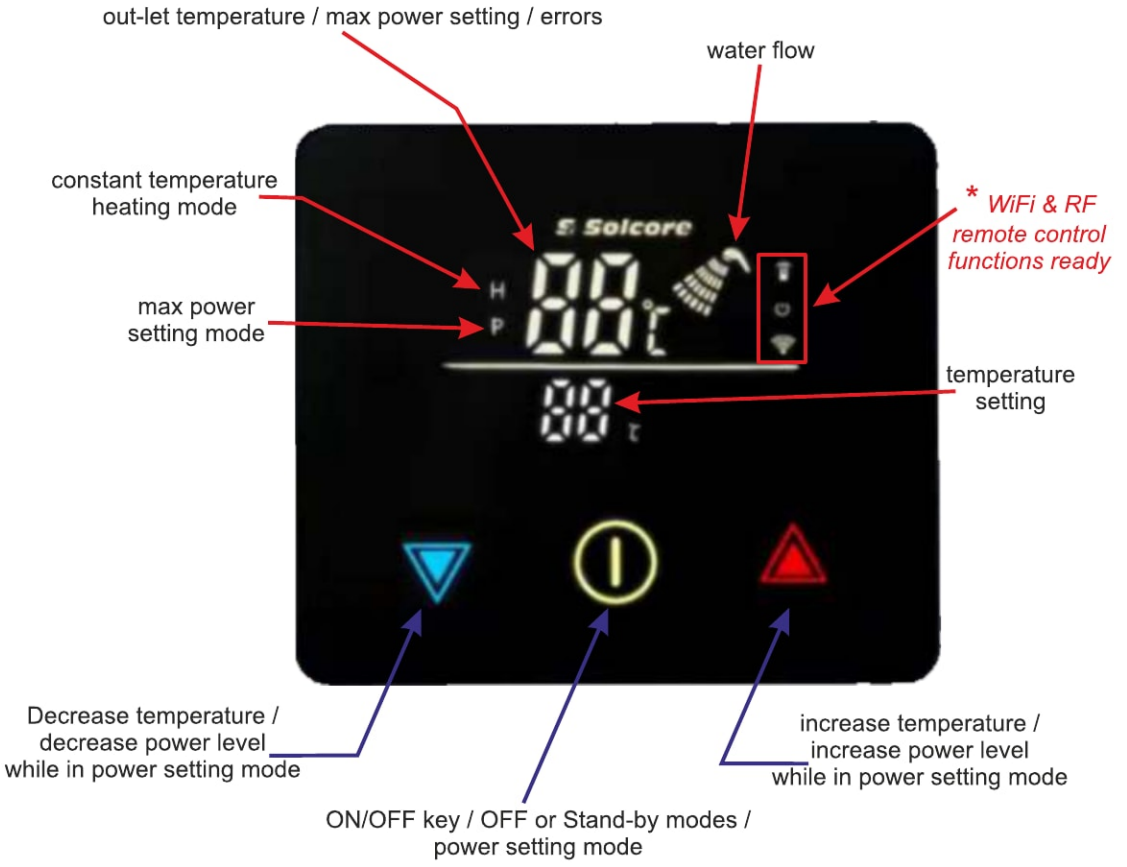

Operating Instructions

- Switch on the air breaker switch from the mains electric power supply. You will listen an instant tone and the setting keys will appear in different colors. The ON/OFF key will be RED indicating that the device is at OFF state.
- To select the desired maximum power press the ON/OFF key for several seconds until you listen a “beep” and you will see the big dual seven segment indicator flashing at the maximum preset power “90" of 9.0kW. Increase or decrease with the ORANGE or BLUE keys respectively to select between 65, 75, 85 or 90 (6.5kW, 7.5kW, 8.5kW or 9.0kW).
- The selected power will flash a few more times and it will be stored leaving the device at the OFF state.
- Open the water tap and turn the water flow valve at maximum flow. Close the tap after a few seconds.
- Press the ON/OFF key once to set the heater at stand-by (ON) state (ON/OFF key becomes GREEN). Press the ORANGE (increase) or the BLUE (decrease) key to select the desired temperature, from 25ºC - 55ºC.
- Open the water tap again and you will see the water flow indicator (shower symbol) and the constant temperature heating indicator (H) to be activated.
- After a few seconds the out-let temperature indicator should show the same number with the setting temperature indicator. If not, then the (H) symbol will flash and the next move that has to be done is to lower very slowly the water flow from the flow valve until the (H) symbol stops flashing and the out-let temperature indicator stays constant at the setting temperature.

Advise

Installation of the circuit must be finished by the professional strictly:

1. Be careful to connect the inlet tube in case of any damage to the water heater.
2. Please put a strainer on the inlet.
3. Use the exclusive electric wire and single phase transition power with 220V-240V/50Hz-60Hz.
4. (1). Outlet pipe is connected to air, any controller is not allowed to be installed.
   (2). Unscrew the inlet pipe, let the inlet pipe connected to air, then water inside is drained.
5. Maintain or replace by professional when the power is damaged, connect the reliable ground line. The ground wire and zero wire should be strictly separated.

Fault Diagnosis & Error Codes

Symptom	Probable Cause	Possible Measures
1.Water leakage from the connection to inlet or outlet pipe	A. Its connection is not installed well B. the rubber gasket on the connection is damaged	A. Re-install its connecton B. Replace the new rubber gasket
2. No display showing	A. No power B. Display is broken down	A. Ensure power on B. Replace the new display
3. failure of the touch button	A. Touch button or PCB is broken down	A. Change the new touch button or PCB
4. Too high water temperature	A. Too high power setting B. Too low water flow	A. Adjust the setting power to be lower B. Increase the water flow
5. Too low water temperaure	A. Too low power setting B. too high water flow	A. Adjust the setting power to be higher B. Decrease the water flow
6. Less and less of the water flow	A. Inlet filter or shower head blocked B. Inlet water rubber plug curl C. Too much thread seal tap blocked	A. Remove and clean filter or shower head B. Replace the new rubber plug C. Re-wrap the thread seal tap
7 . No hot water, shows standby status	A. Water flow switch does not start yet B. Too low inlet water pressure	A. Replace the new water flow switch B. Open the water pressure valve, increase water pressure
8. LED display show "E1"	Out-let temperature sensor fault.	Please contact the after sales department of "SOLCORE".
9. LED display show "E2"	In-let temperature sensor fault.	Please contact the after sales department of "SOLCORE".
10. LED display show "E3"	Over-temperature fault.	Please contact the after sales department of "SOLCORE".
11. LED display show "E5"	Electric leakage detection.	Please contact the after sales department of "SOLCORE".

Solcore
ΤΑΧΥΘΕΡΜΑΝΤΗΡΕΣ ΝΕΡΟΥ

DECLARATION OF CONFORMITY

CE

MANUFACTURER:	"SOLCORE" K&A KALATOUDIS G.P.
MANUFACTURER'S ADDRESS:	147 K. KARAMANLI AVE, GR542 49, THESSALONIKI, GREECE
NAME AND ADDRESS OF THE AUTHORISED PERSON WHO COMPILED THE TECHNICAL FILE:	MR. KALATOUDIS - 147 K. KARAMANLI AVE, GR542 49, THESSALONIKI, GREECE T. +30 2310 923130, F. +30 2310 923131
PRODUCT:	ELECTRIC INSTANT WATER HEATER
TYPE:	**K9**
SERIAL NUMBER:	
YEAR OF CE MARK:	2021
E.U. DIRECTIVES:	2014/35/EU, 2014/30/EU, 2013/812/EU, 2013/814/EU, 2011/65/EU
HARMONIZED STANDARDS:	EN 60335-2-35:2016+A11:2018; EN 62233:2008; EN 60335-1:2012+A11:2014+A13:2017+A1:2019+A14:2019+A2:2019 EN 55014-1:2017+A11:2020; EN 55014-2:2015, EN IEC 61000-3-2:2019, EN 61000-3-3:2013+A1:2019 EU812/EU814, EN50193-1:2013

We hereby declare with exclusive responsibility that the above electric device has been designed and manufactured according to the above European Directive's requirements, and it can continue to meet these requirements if it is used and installed according to the attached instructions and/or rules and circumscriptions.

General Manager

Konstantinos E. Kalatoudis
Engineering Manager

SOLCORE
Κ. & Α. ΚΑΛΑΤΟΥΔΗΣ Ο.Ε.
ΕΜΠΟΡΙΑ ΤΑΧΥΘΕΡΜΑΝΤΗΡΩΝ
Κ. ΚΑΡΑΜΑΝΛΗ 147 - ΤΚ 542 49 - ΘΕΣΣΑΛΟΝΙΚΗ
ΤΗΛ.: 2310 92.31.30 - ΦΑΞ: 2310 92.31.31
ΑΦΜ: 097810178 - ΔΟΥ: Η' ΘΕΣ/ΝΙΚΗΣ

Date

Based on purchase date

Warranty Certificate

SOLCORE guarantees the proper functioning of the device accompanied by this warranty.

The guarantee is valid for two **(2) years** and a **Ten (10) Years *** special warranty is provided only for water leaks due to corrosion in the heater cast aluminum system.

The guarantee is valid from the date of purchase of the Electric Instant Water Heater from **SOLCORE** or affiliate store and in any case must be accompanied by the purchase documents.

The warranty is valid when you fill in all the empty fields in the "Warranty Coupon" and send it to "**SOLCORE**" within **ten (10) Days** from the purchase of the device.

This guarantee fully covers the replacement of parts and the labor during the period of **two (2) years** in order to restore the device in proper operating condition or complete replacement if deemed necessary by the technical support department.

***The Ten (10) Years special warranty**, that applies only to the **cast aluminum heating system** covers only the replacement cost (spare and labor). Other components of the device that need replacement and their malfunction is not related with the defective cast aluminium heating system but with other factors and have overcome the Two (2) Years of operation, they normally charged along with labor to replace them.

The shipping of the device from the owner's location to the repair department of **SOLCORE** and vice versa is done with responsibility and expenses of the owner.

Warranty Coupon

Please fill out the warranty coupon and send it in our company within ten (10) days from the purchase of the device.

Model Type: ..... Serial Number(S/N): .....

Purchase Location ..... Purchase Date .....

Customer's Full Name: .....

Address: .....

Telephone: ..... Cell Phone: .....

Store of purchase: ..... Installer's Details: .....

Customer's Signature

Installer's Details

The customer and the Installer confirm with their signatures that the device is working properly.

Warranty Terms

THE WARRANTY DOES NOT COVER:

- **Damage due to poor installation.**
- **Damage due to misuse.**
- **Any transport damage.**
- **Damage due to frost.**
- **Damage due to intervention by a person not authorized by the "SOLCORE".**

The guarantee also become invalid in cases where there are obvious signs of violation of the components that make up the device (scratches on electronic boards, curled contacts or connections etc.), and if you remove the identification label attached to the side.

"SOLCORE" K&A Kalatoudis G.P.

147 K. Karamanli Ave., GR 542 49

Thessaloniki, Greece

Tel: +30 2310 923130

Fax: +30 2310 923130

e_mail: info@solcore.eu

Solcore
Solcore

