Solcore®




Electric Tankless Water Heater

# K7 (INVERTER)

3 in 1
SMART POWER

10
Years non-corrosion Warranty

Ca
0% Scale

ECO

# Installation Instructions & User's Manual

Solcore
4545

**1)** Water heater



**2)** Triple-spray hand shower



**3)** Stainless steel shower hose



**4)** Flow regulator



**5)** Set of screws and wall plugs



**6)** Set of cable gland and screws



- Means for disconnection must be incorporated in the fixed wiring in accordance with the wiring rules.
- The appliance must not be supplied through an external switching device, such as a timer, or be connected to a circuit that is regularly switched on and off by the utility, in order to avoid a hazard from inadvertent resetting of the thermal cut-out.

Before gaining access to the terminals, all supply circuits must be disconnected.

**Note:** The terminals used for connection to the mains are marked as follows:

Terminals intended exclusively for the neutral conductor are marked with the letter **N**.

Terminals intended for the phase conductor are marked with the letter **L**.

Protective earth terminals are marked with the symbol: ⏚.

**Note:** The various positions of the switches and of the control devices on the appliance are indicated by figures and letters.

- For maintenance work, follow the instructions given on the next pages.
- Do not switch on the appliance if there is a possibility that the water in the heater is frozen.
- If the supply cable is damaged, it must be replaced by the manufacturer, its authorised representative or a similarly qualified person, in order to avoid a hazard.
- The appliance must be installed on the structural elements of the building in a permanent and reliable way, using the screws and wall plugs supplied with the appliance. Do not use adhesives (glue) to mount the appliance, because they are not a reliable means of fixing.
- For correct operation of the appliance:
  - The maximum permitted inlet water pressure must not exceed 1.0 MPa
  - The minimum permitted inlet water pressure must not be lower than 0.05 MPa

.

# CONTENTS


1. General information

2. Packaging, transport, storage & installation
   - 2.1. Delivery
   - 2.2. Handling
   - 2.3. Storage
   - 2.4. Installation
     - 2.4.1. Preparing the fixing
     - 2.4.2. Electrical connection
     - 2.4.3. Final fixing
     - 2.4.4. Hydraulic connection methods

3. Technical description

   - 3.1. Intended use
   - 3.2. Description - Technical characteristics
   - 3.3. Wiring diagram K7
   - 3.4. Display and touch selector options

4. Operating instructions

5. Maintenance - repair instructions
   - 5.1. End of life cycle

6. Declaration of conformity

# 1. GENERAL INFORMATION

The **K7** water heater is manufactured in accordance with the following European technical harmonisation directives:

**2014/35/EU** relating to electrical equipment designed for use within certain voltage limits.

**2014/30/EU** on the approximation of the laws of the Member States relating to electromagnetic compatibility.

**2011/65/EU** on the restriction of the use of certain hazardous substances in electrical and electronic equipment.

The appliance bears the **CE** marking in a visible place, as required by the legislation in force which permits the free circulation of appliances within the Member States of the European Union only if they have been checked - certified - and bear the **CE** marking.

These instructions for use were written for the correct and safe operation of the appliance. You must observe what is specified in them, together with all relevant national and European regulations, consult them for every action concerning the use of the appliance, and keep them carefully, bearing in mind that you may need to consult them in the future.

These instructions are an integral part of the appliance. They must always be available to the qualified person who undertakes the installation, maintenance and use of the appliance.

These instructions are addressed to the installer, the maintainer and the user of the appliance.

Before installing the appliance, the installer must be informed of the requirements - instructions - restrictions of this manual. Before each operation of the appliance, the operator must be informed of the requirements - instructions - restrictions of this manual.

Before carrying out any maintenance work, the qualified personnel must be informed of the requirements - instructions - restrictions of this manual. Only with full knowledge of this manual can mistakes be avoided and the trouble-free operation of the product be guaranteed.

The company **K. & A. KALATOUDIS O.E.** accepts no responsibility for the operation of the appliance beyond its intended use, nor in cases where the conditions - requirements specified in this technical manual are not met.

**IN ANY CASE OF CONTACT, QUOTE THE TYPE AND SERIAL NUMBER OF THE APPLIANCE.**

# 2. PACKAGING, TRANSPORT, STORAGE & INSTALLATION

## 2.1 Delivery

The appliance is delivered packaged, with all the accessories needed for safe mounting on the structural elements of the building where it is to be installed.

The correct operation of the appliance depends on the position it takes during installation. Before putting the appliance into operation, make sure that it has been installed in a vertical position.

The appliance must be used only after it has been installed and checked in accordance with the following paragraphs of this manual.

Technically, the appliance is absolutely safe for its intended use. To maintain this condition and ensure safe use, what is specified in these instructions for use must be observed.

## 2.2 Handling

The shape and weight of the appliance allow it to be carried by hand, without the need for lifting equipment.

## 2.3 Storage

If storage is necessary, take care that the appliance is stored in a place protected from weather conditions and where access is allowed only to authorised persons.

Before storing the appliance, make sure that you have hermetically closed the water ports (inlet and outlet), so that no dust or dirt can enter that could cause problems during operation of the appliance.

## 2.4 Installation

The appliance is equipped with suitable means that ensure its reliable fixing to the structural elements of the installation site. The support must be independent. The appliance must not be supported by its connections to the water pipes.

The appliance is intended for installation in any indoor space (domestic or professional).
⚠ The appliance must not be installed in places exposed to weather conditions. The space must meet the specifications and requirements set by national legislation (building regulations, fire-safety regulations, etc.). The connection of the appliance to the electrical network and the electrical installation must comply with the obligations set out in standard HD 384 and/or the regulations for internal electrical installations.

***REQUIRED:*** *the water heater must be connected to a power supply that is linked to an electrical distribution board with a residual-current device (RCD).*

⚠ The appliance must not be installed for operation in an explosive environment.
⚠ No flammable or explosive substances or materials may be present in contact with any part of the appliance, or around it.

For the hydraulic installation, take special care with the connections so that no leaks are possible. The use of a spiral hose under pressure is recommended. If different metals are used in the hydraulic installation (e.g. copper pipes and iron fittings), an anode must be used to avoid electrolysis. In this case an annual periodic inspection is required.

For safe operation, make sure that the supply voltage and the frequency of the current have the same value as that stated on the technical data plate on the frame of the appliance.

The appliance must be installed in such a way that the power supply cable is protected from possible damage (e.g. sharp edges, friction, abrasion, etc.).

On the **K7** appliance the electrical connection is made through a terminal block that is pre-installed inside the casing. On the free ends of the terminal block you can fit a flexible power supply cable (*see Chapter 3.2, page 11, table 1 for choosing the correct cross-section of the supply cable*), which is connected to a residual-current device (RCD).

⚠ **Note:** The appliance must be installed in such a way that the marking placed on the appliance can still be read easily after installation.

### 2.4.1 Preparing the fixing

To fix the appliance to the structural elements of the installation site, follow these steps:

1) Choose the point where you wish to install the appliance and the type of hydraulic connection (see the hydraulic connection methods, **page 9**).

2) Mark the spot and drill with a suitable drill bit for a Ø6 mm hole (**figure 1**).

3) Screw in the screw so that it protrudes by 10 mm (**figure 2**).

4) Hang the appliance and mark the point where you must drill to fix the screw from the bottom of the appliance. Take the appliance down again and drill (Ø6 hole) at the point you marked (**figure 3**).

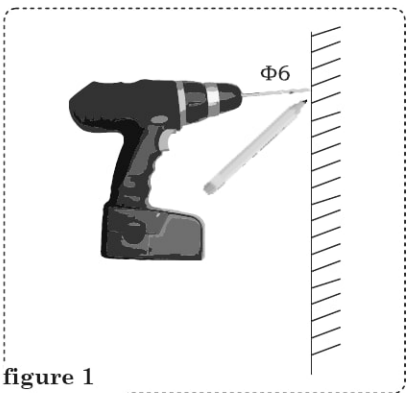


figure 1

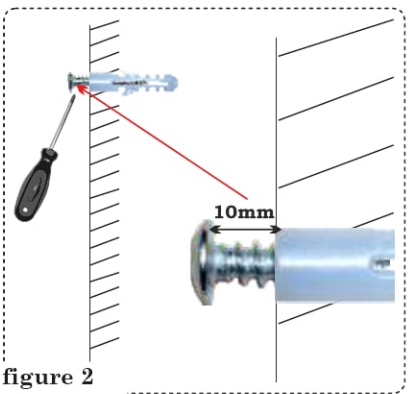


figure 2

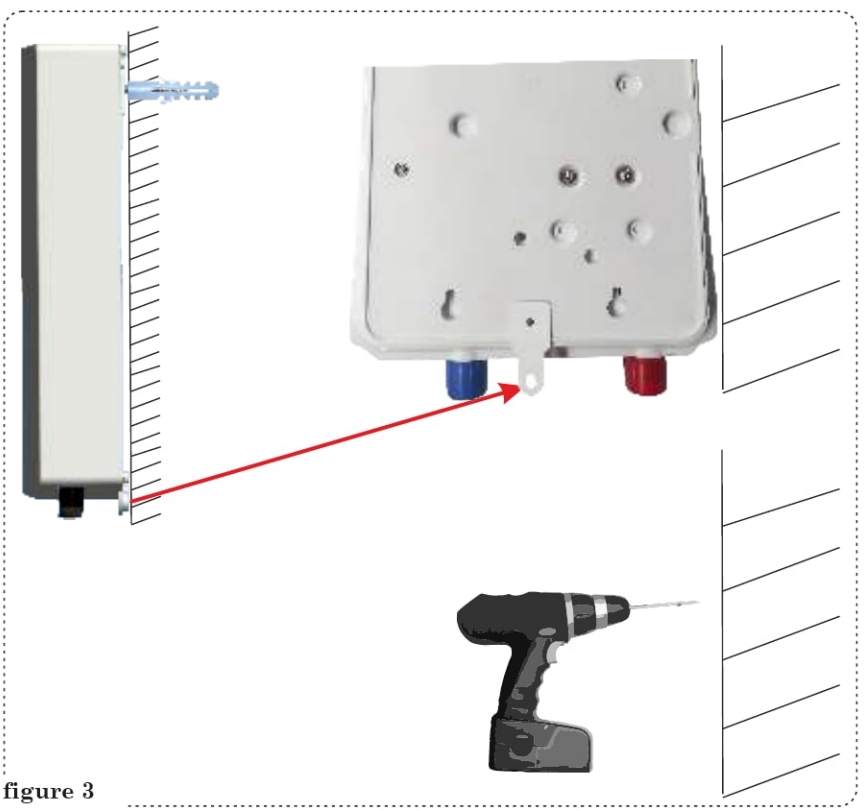

figure 3

⚠ The electrical connection must be made by a licensed installer of the relevant specialty.

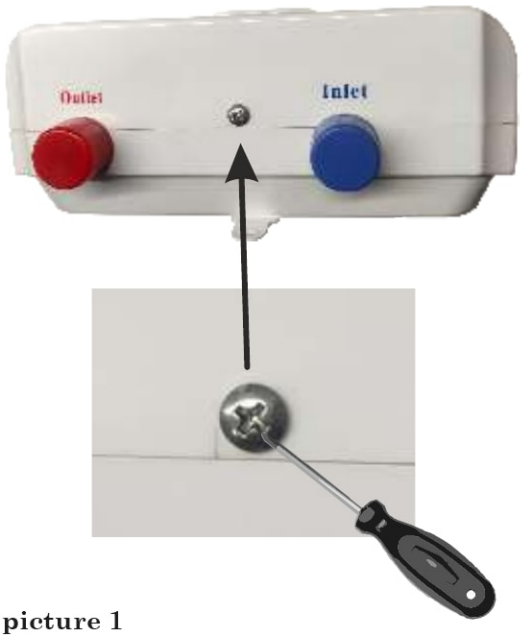


picture 1

Unscrew the screw at the bottom of the appliance (**picture 1**) and carefully remove the cover, after first disconnecting the ribbon cable from the central board (**picture 2-b**).

On the **K7** the electrical connection is made through a terminal block located inside the appliance, in the upper right corner (**picture 2-a**). On the free sockets of the terminal block you can fit a flexible power supply cable of suitable cross-section.

**ATTENTION**: Under the free sockets of the terminal block there is a marking for the intended connection of the ends of the supply cable (**L=phase, N=neutral, earth**), which is connected to an electrical panel through a residual-current device (RCD) (**picture 2-a**).

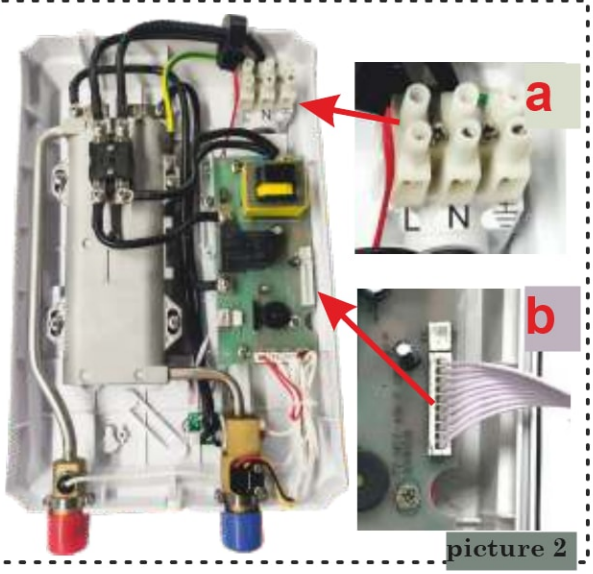


picture 2




picture 3

On the back of the appliance (back plate) you will find the specially shaped passage for the power supply cable (**picture 3-a**). After passing the cable inside the appliance, turn it so that it fits into the channel shaped for it, and fasten it with the cable gland (**picture 3-b**).

*To choose the correct cross-section of the cable, refer to the technical table of the appliance on **page 11.***

### 2.4.3 Hydraulic connection methods

**The K7 can be installed either to supply hot water to one point of use or to supply several points of use. It can also work together with other sources of hot water (hybrid installation). Below we give you pictures with the installation methods and the corresponding hydraulic connections.**

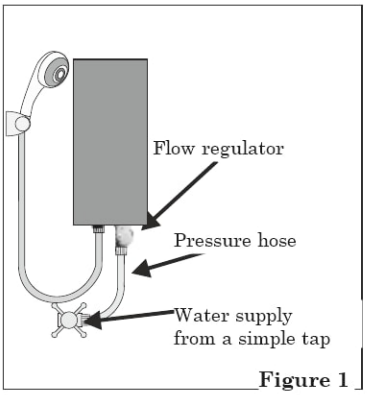

Figure 1

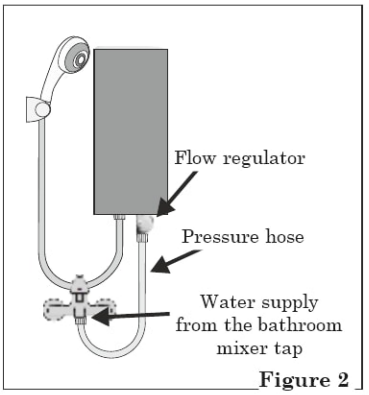

Figure 2

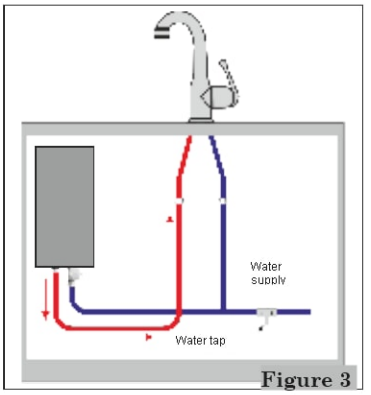

Figure 3

***Hydraulic connection with free outlet for the supply of hot water to one point of use (Figure 1 & Figure 2). Hydraulic connection of the "pressure" line type for the supply of hot water to one point of use (Figure 3).***

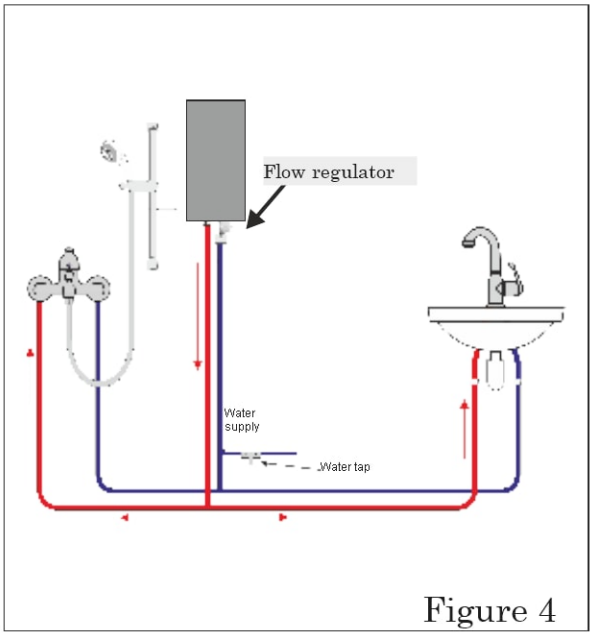

Figure 4

***Hydraulic connection of the "pressure" line type for the supply of hot water to several points of use (Figure 4).***

***⚠ Attention: The length of the hot-water pipes from the heater to each point of use must not exceed three (3) metres. The appliance supplies a sufficient quantity of water for only one point of use, and not for all points of use at the same time.***

***⚠ Setting the power range to 5.5 kW and above is required.***

***⚠ Use of the hand shower is required.***

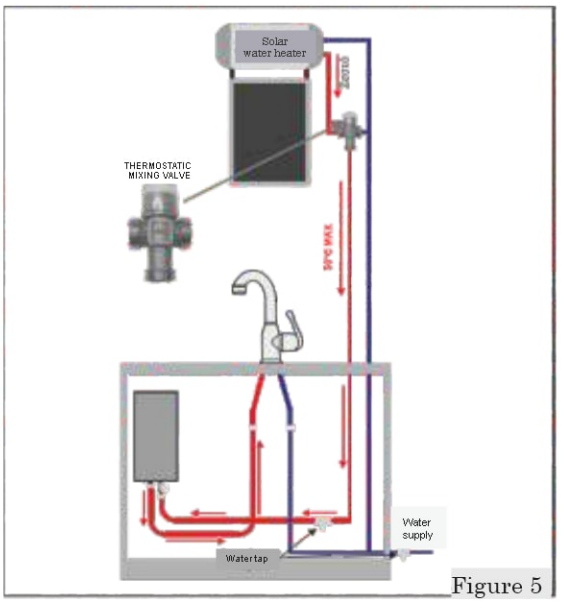

Figure 5

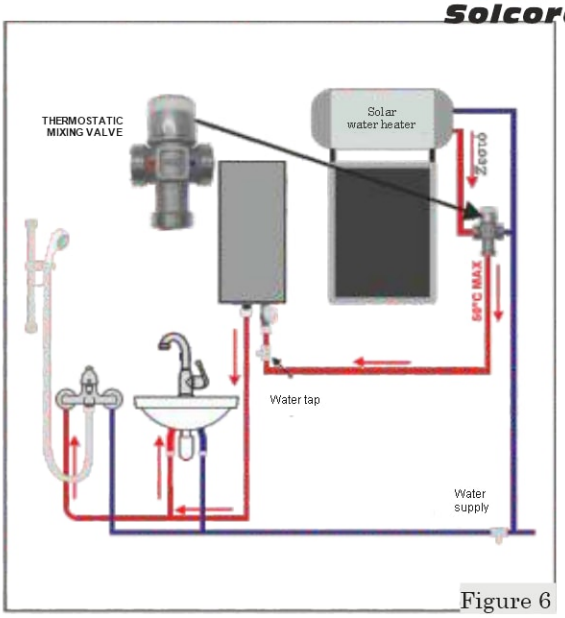

Figure 6

*With the hybrid installation (Figure 5, Figure 6) we take advantage of another source of hot water (solar water heater). If the output of the solar water heater is not sufficient, the water heater switches on automatically and restores the water to the desired temperature.*

⚠ *Attention: An automatic thermostatic mixing valve is required to regulate the water inlet temperature to the heater so that it does not exceed 50 °C.*

⚠ *Attention: The length of the hot-water pipes from the heater to each point of use must not exceed three (3) metres. The appliance supplies a sufficient quantity of water for only one point of use, and not for all points of use at the same time.*

⚠ *Setting the power range to 7.5 kW is required.*

⚠ *Use of the hand shower is required.*

## Operating procedure (first setting)

⚠ After the connections and the installation have been completed, check for leaks and connection errors before putting the appliance into operation.

For the operation of the appliance, follow the instructions given in Chapter 4.

# 3. TECHNICAL DESCRIPTION

## 3.1 Intended use

The **K7** appliance was designed and manufactured exclusively for the immediate production of hot water in any closed domestic or professional space.

⚠ **PROHIBITED:** *the use of the appliance for heating any liquid other than water.*

## 3.2 Description - Technical characteristics

| Voltage (V) | Power setting (kW) | Current (A) | Cable cross-section ($mm^2$) | Temperature rise (Δt) | | |
|---|---|---|---|---|---|---|
| | | | | 20°C | 25°C | 30°C |
| | | | | Water flow rate in (L / min) | | |
| 230V AC~ 50Hz | 5.5 | 24 | 3x4.0 | 4.0 | 3.2 | 2.6 |
| | 6.5 | 28 | 3x4.0 | 4.7 | 3.7 | 3.1 |
| | 7.5 | 32 | 3x6.0 | 5.4 | 4.3 | 3.6 |
| Device dimensions: 32.5*20.0*8.20cm | | | | | | |
| Ingress protection rating: IP25 | | | | | | |
| Casing type: White ABS | | | | | | |
| Hydraulic connection type: G1/2" F | | | | | | |

**Table 1**

### 3.3 Wiring diagram

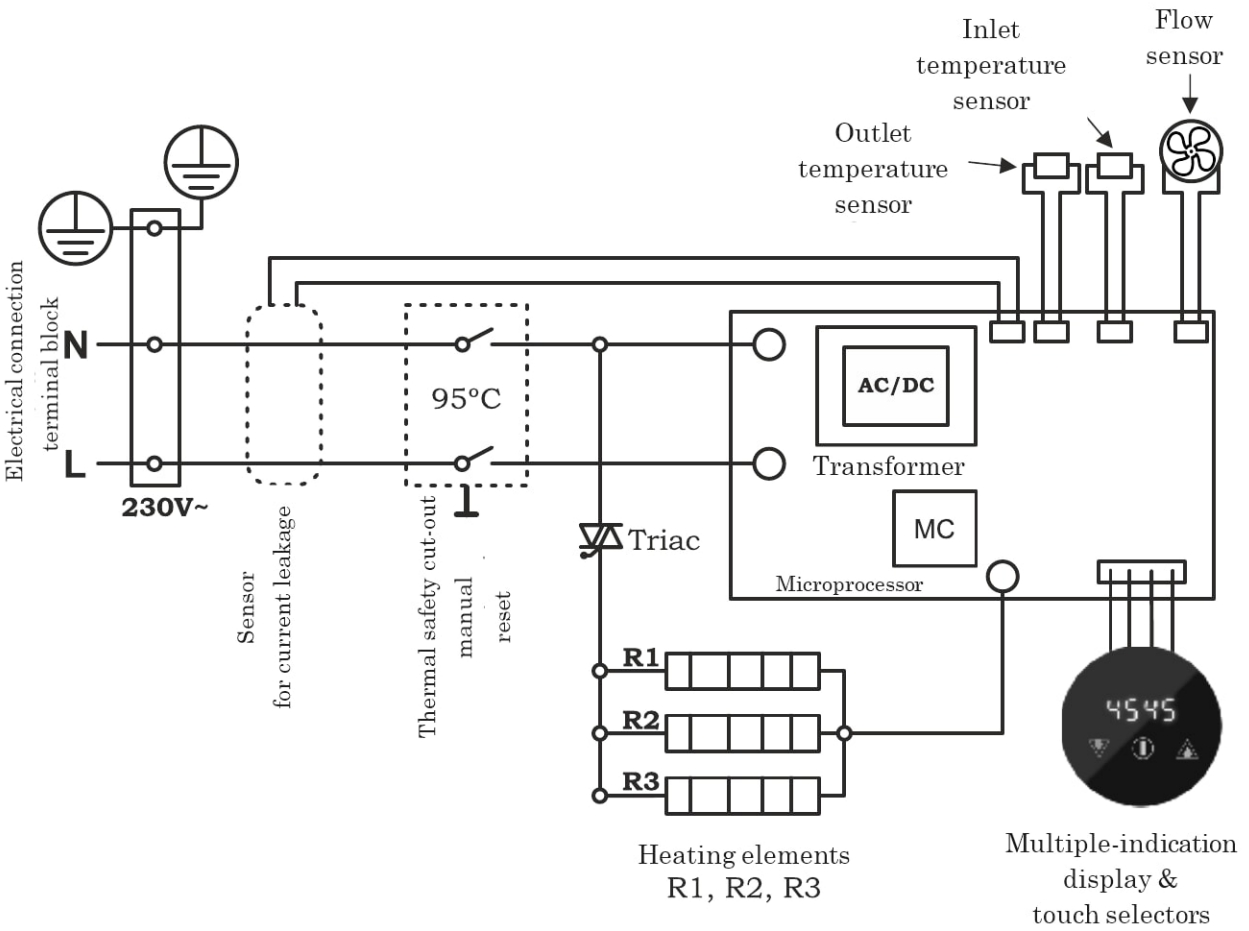

### 3.4 Display with multiple indications and touch selectors.

Indication:
a) Outlet temperature.

Indications:
a) Selected temperature
b) Water flow and start of water heating ("H").

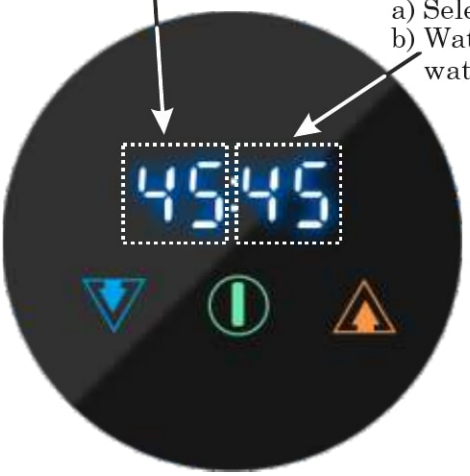


Indication of selection of the maximum power range.

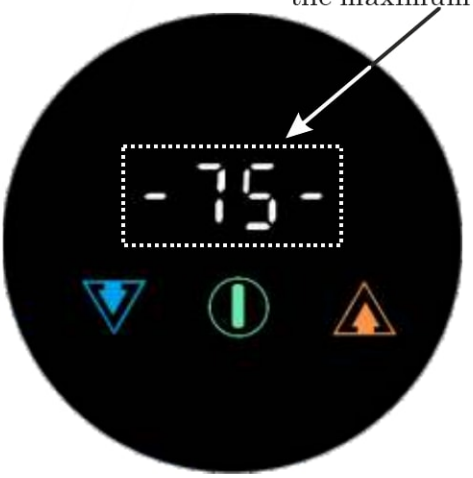





Selector (blue triangle)

a) Decrease the desired temperature.
b) Decrease the power range.
c) Goes out when the appliance is switched off.

Selector (orange triangle)

a) Increase the desired temperature.
b) Increase the power range.
c) Goes out when the appliance is switched off.

Selector (ON/OFF)
a) Switches the appliance on (standby position) and off (green and red respectively).
b) Switches on the selection of the power range.

# 4. Operating instructions

After the electrical and hydraulic connection, the appliance is ready to be put into operation. The **K7** has an LED display with multiple indications and touch selectors (**page 12**).

**1)** Before powering the appliance, open the water and let it run for a few seconds with the flow regulator fully open.

**2)** Switch on the circuit breaker (automatic fuse) at the panel to supply power to the water heater. You hear two characteristic sounds and at the same time all the digits and symbols of the display light up, together with the three touch selectors. Then the selected power range appears (factory pre-selection 7.5 kW)† and afterwards everything goes out except the red light of the (ON / OFF) selector.

**3)** Lightly touch the (ON / OFF) selector. The display lights up and shows the outlet temperature, and at the same time the two selectors, the blue triangle on the left and the orange triangle on the right, light up.

**4)** Select the desired temperature by lightly touching the blue triangle on the left to decrease it and the orange triangle on the right to increase it. The temperature you select will flash three times and will then be stored and stay visible. The range of choices is limited from 25 °C to 55 °C in steps of 1 °C. *(It is recommended that the temperature of use does not exceed 45 °C.)*

**5)** Open the water flow according to the hydraulic installation. *(At the first operation, or after a power cut† or switching off the power at the electrical panel†, the appliance will start to heat the water after a delay of three (3) seconds.)* At the temperature selection position the symbol "H" appears, together with bars that rotate. This means that the appliance has started to heat the water. If the displayed temperature is not the desired one, slowly and steadily reduce the water flow with the flow regulator until the temperature stabilises at the desired value. The temperature stays constant despite any changes in the flow or in the temperature of the water entering the appliance.

**6)** The **K7** water heater has a function that limits the range of the maximum power (smart power). You can choose between three levels, 5.5 kW, 6.5 kW and 7.5 kW, which is also the maximum power produced by the heating elements.

Follow the procedure below to select the maximum power range:

**a)** Make sure that there is no water flow and that the appliance is switched off. Only the (ON / OFF) touch selector must be lit, in red.

**b)** Place your finger on the (ON / OFF) touch selector and hold it for five (5) seconds, until you hear a short sound and one of the following numbers appears (55 or 65 or 75) which will flash. Choose with the right or the left triangle to increase or decrease it respectively, before it flashes three (3) times. Then the selected number will flash three (3) times to be stored and will disappear. The appliance stays switched off. *Then follow the instructions in paragraphs 3), 4) and 5).*

*† The appliance has a memory function: after any interruption of the power supply, when the power is restored it returns to its last state (switched off or standby) and its last settings.*

## 4.1 Troubleshooting table

| Problem | Cause | Solution |
|---|---|---|
| Water leak at the inlet / outlet | Poor connection of the hoses, or worn-out rubber washers | Tighten the hoses or replace the washers |
| No indication on the display | No electric current reaches the appliance | Check the wiring / the circuit breaker at the electrical panel |
| | The display is faulty | Call +30 2310923130 |
| Low or no water flow | The water supply from the mains has been interrupted or stopped | Wait until normal flow is restored |
| | Wrong hydraulic connection | Check the hydraulic connection and carry out repairs if necessary |
| | The water flow is lower than 2 L/min | Wait until normal flow is restored |
| | Flow obstructed by clogged filters (shower head - filter or flow regulator) | Clean the filters |
| | Flow obstructed by a clogged hand shower | Clean the hand shower |
| The water does not get hot | The heating elements are faulty | Contact SOLCORE |
| | The thermal safety cut-out has been activated | |
| | No electric current | Check the power supply |
| | The residual-current protection device has been activated | Call +30 2310923130 |
| The heater does not switch on while water is running and the display is lit | The magnetic flow sensor is faulty | Call +30 2310923130 |
| Water temperature too low | Water flow too high | Reduce the flow with the flow regulator |
| Water temperature too high | Water flow too low | Increase the flow with the flow regulator |
| The automatic switch at the electrical panel trips | The power supply has a short circuit or there is a current leakage | Call +30 2310923130 |
| Fault indication "E1" | Outlet temperature sensor fault | Call +30 2310923130 |
| Fault indication "E2" | Inlet temperature sensor fault | |
| Fault indication "E3" | Appliance overheating >55 °C | |
| Fault indication "E4" | Current leakage detected | |

*Whenever a fault or uncertainty arises, act as follows:*

1. *Switch the appliance off at the electrical panel.*
2. *Call a specialised technician approved by the manufacturer, or the manufacturer's representative.*

The head of the triple-spray hand shower must be cleaned regularly.

Any maintenance or repair work must be carried out only by a specialised technician approved by the manufacturer or by its representative. Any spare parts that may need to be used must have been approved by the manufacturing company.

In every case of malfunction or damage to the appliance, refer to a specialised technician who has been approved by the manufacturer or by its representative.

Before carrying out any work to replace and clean the filters, make sure that you have cut off the appliance from the water network. Disconnect the appliance from the current by unplugging it and/or switching off the circuit breaker at the electrical panel. The work must be assigned to a competent person, or to someone who can carry it out because they have the relevant experience.

### 5.1 End of life cycle

The appliance must not be disposed of together with household waste at the end of its life cycle. It contains electronic components and recyclable materials which can be recovered by approved waste management companies.

Please contact the dealer from whom you bought the appliance, or the local authority (municipality), to receive the appropriate guidance on how to dispose of the appliance.

# DECLARATION OF CONFORMITY

| | |
|---|---|
| MANUFACTURER: | K&A KALATOUDIS O.E. |
| MANUFACTURER'S ADDRESS: | 147 K. KARAMANLI AVE., 542 49, THESSALONIKI |
| NAME & ADDRESS OF THE AUTHORISED PERSON WHO COMPILED THE TECHNICAL FILE: | KALATOUDIS - 147 K. KARAMANLI AVE., THESSALONIKI<br>TEL. +30 2310923130, FAX +30 923131 |
| PRODUCT: | ELECTRIC TANKLESS WATER HEATER |
| TYPE: | **K7** |
| SERIAL NUMBER: | |
| YEAR OF MARKING: | 2020 |
| EU DIRECTIVES: | 2014/35/EU, 2014/30/EU, 2013/812/EU, 2013/814/EU, 2011/65/EU |
| HARMONISED STANDARDS: | EN 60335-2-35: 2016<br>EN 60335-1: 2012 + A11: 2014 + A13: 2017<br>EN 62233: 2008<br><br>EN 55014-1: 2017<br>EN 55014-2: 2015<br>EN 61000-3-2: 2019<br>EN 61000-3-3: 2013 + A1: 2019<br><br>EN 50193-1: 2016 |

We hereby declare, under our sole responsibility, that the above appliance has been designed and manufactured in accordance with the requirements of the above EU DIRECTIVES and continues to comply with these requirements as long as it is used in accordance with the accompanying instructions and/or the restrictive rules.

SOLCORE
Κ. & Α. ΚΑΛΑΤΟΥΔΗΣ Ο.Ε.
ΕΜΠΟΡΙΑ ΤΑΧΥΘΕΡΜΑΝΤΗΡΩΝ
Κ. ΚΑΡΑΜΑΝΛΗ 147, Τ.Κ. 542 49 - ΘΕΣΣΑΛΟΝΙΚΗ
ΤΗΛ.: 2310 92.31.30 FAX: 2310 92.31.31
ΑΦΜ: 097810178 - ΔΟΥ: Η' ΘΕΣ/ΝΙΚΗΣ

Solcore
4545

# Warranty Certificate

The company **SOLCORE** guarantees the good operation of the appliance accompanied by this warranty.

The warranty is valid for **Two (2) Years** and a special warranty of **Ten (10) Years*** is provided only for possible water leaks caused by perforation due to corrosion in the aluminium heating system.

The warranty is valid from the date of purchase of the water heater, from **SOLCORE** or from a cooperating store, and must in every case be accompanied by the purchase document (receipt/invoice).

For the warranty to be valid, you must fill in all the blank fields in the **"Warranty Slip"** and send it to **"SOLCORE"** within **Ten (10) Days** of the purchase of the water heater.

This warranty fully covers the spare parts and the labour during the period of the **Two (2) Years**, with the aim of restoring the water heater to good working order, or of replacing it completely if this is considered necessary by the technical support department.

*The special **Ten (10) Year** warranty, which applies only to the aluminium heating system, covers only its replacement cost (spare set and labour). All other parts of the water heater that need replacing, and whose wear and malfunction is not related to the aluminium heating system but to other causes, and which have exceeded the **Two (2) Years** of operation, are charged normally together with the labour for replacing them.

The transport of the water heater from the installation site to the repair site and back is at the owner's responsibility and expense.

## Warranty Slip

*Please fill in and send this warranty slip to our company within TEN (10) days of the purchase of the appliance.*

Appliance type: ..... Serial number (S/N): .....

Date of purchase: .....

Customer name: .....

Address: .....

Telephone: ..... Mobile: .....

Place of purchase: ..... Installer details: .....

**Customer signature** **Installer signature**

--- ---

*The customer and the installer confirm with their signatures that the appliance works properly.*

# Warranty Terms

**THIS WARRANTY DOES NOT COVER:**

- Damage due to incorrect installation.
- Damage due to misuse.
- Any damage during transport.
- Damage due to frost.
- Damage due to intervention by a person not authorised by "SOLCORE".

The warranty also loses its validity in cases where there are visible signs of violation of the components that make up the appliance (scratches on the electronic boards, twisted contacts or connections, etc.), or if the identification label on the side is removed.

**"SOLCORE" K&A Kalatoudis O.E.**

**147 K. Karamanli Ave., 542 49**

**Thessaloniki**

**Tel: 2310 923130**

**Fax: 2310 923130**

**e-mail: info@solcore.eu**

Solcore
4545