Solcore

Exhaust Fans

Installation & User's Manual





www.solcore.eu



Model:	**S100-FW (White) or S100-FG (Graphite)**
Rated Voltage:	220V - 240V / 50Hz - 60Hz
Rated Power:	16.5Watt @ 230V / 50Hz
Revolution Speed:	2450 rpm
Air Flow Volume:	101.70m³/h
Noise Level:	30dBs
Splash Proof Class:	IPX4
Country of Origin:	P.R.China



Model:	**S100-NW (White) or S100-NG (Graphite)**
Rated Voltage:	220V - 240V / 50Hz - 60Hz
Rated Power:	15.3Watt @ 230V / 50Hz
Revolution Speed:	2520 rpm
Air Flow Volume:	104.50m³/h
Noise Level:	28dBs
Splash Proof Class:	IPX4
Country of Origin:	P.R.China



Model:	**S120-NW (White) or S120-NG (Graphite)**
Rated Voltage:	220V - 240V / 50Hz - 60Hz
Rated Power:	17.5Watt @ 230V / 50Hz
Revolution Speed:	2390 rpm
Air Flow Volume:	158.70m³/h
Noise Level:	34dBs
Splash Proof Class:	IPX4
Country of Origin:	P.R.China

- READ THE USER'S MANUAL CAREFULLY BEFORE PROCEEDING WITH INSTALLATION WORKS.
- COMPLIANCE WITH THE MANUAL REQUIREMENTS ENSURES RELIABLE OPERATION AND LONG SERVICE LIFE OF THE UNIT.
- KEEP THE USER'S MANUAL AVAILABLE AS LONG AS YOU USE THE UNIT. YOU MAY NEED TO RE-READ THE INFORMATION ON THE PRODUCT SERVICING.

- FOLLOW THE USER'S MANUAL REQUIREMENTS TO ENSURE FLOW-LESS AND TROUBLE-FREE OPERATION OF THE UNIT.

- The unit is allowed to be used by children aged from 8 years old and above and persons with reduced physical, sensory, or mental capabilities or no experience and knowledge provided that they have been given supervision or instruction regarding safe use of the unit and understand the risks involved.

- THE PRODUCT MUST BE DISPOSED SEPARATELY AT THE END OF ITS SERVICE LIFE. DO NOT DISPOSE THE UNIT AS UNSORTED MUNICIPAL WASTE.

- Disconnect the unit from power supply prior to any connection, servicing, maintenance, and repair operations.
- Only qualified electricians with a work permit for electrical units are allowed for installation and maintenance.
- Single-phase power mains must comply with the acting local electrical norms and standards.
- Fixed electrical wiring must be equipped with an automatic circuit breaker.
- The unit must be connected to power mains through a QF automatic circuit breaker integrated into the fixed wiring system. Check the unit for any visible damages of the impeller and the casing before starting installation. The casing internals must be free of any foreign objects that can damage the fan blades.
- While mounting the unit, avoid compression of the casing! Deformation of the casing may result in noisy operation or the dagame of the fan blades and the motor. Misuse of the unit and any modifications caused will immediately void the three-year warranty.
- Take steps to prevent ingress of smoke, carbon monoxide, and other combustion products into the room through open chimney flues or other fire-protection devices. Sufficient air supply must be provided for proper combustion and exhaust of gases through the chimney of fuel burning equipment to prevent back drafting. Transported air must not contain any dust or other solid impurities, sticky substances, or fibrous materials.
- Do not use the unit in a hazardous or explosive environment containing spirits, gasoline, insecticides, etc.
- Do not close or block the intake or exhaust vents in order to ensure efficient air flow.

OPERATION GUIDELINES

- The fan is rated for connection to single-phase AC 230 V/50 Hz or 230 V/60 Hz mains power supply.
- Ingress protection rating against access to water ingress is IPX4.
- The fan is rated for operation at the ambient temperature ranging from +1 °C up to +45 °C.
- The unit is rated as a Class II electrical appliance.

INSTALLATION AND SETUP

- The fan is designed for wall or ceiling mounting with direct air exhaust to the ventilation shaft or into the round air duct of matching diameter (Φ mm) (Page 4).

Fan installation steps (see page 5):

- Cut off the power supply and make sure there is not any electricity.
- A power cable from the mains power supply switchboard to the vent spot has to be installed along with an external ON/OFF switch of any type that will operate the exhaust fan.
- Remove the front ABS cover from the unit.
- Spot the dual socket terminal block and pool it off from the body of the exhaust fan with care not damaging the cables.
- Insert the back (tail) of the exhaust fan in the vent hole and mark through the openings on the four corners of the unit four dots on the mounting surface respectively.
- Remove the unit, drill the marked holes and insert one plastic plug in each of the four holes.
- Insert again the unit in the vent hole align it to the four drilled holes on the mounting surface and fix it with the four screws firmly.
- Connect the exhaust fan with the mains electric power supply according to the wiring diagram using the terminal block and insert the terminal block back to its fixed position (Page 4).
- Turn on the power supply to check of the fan is working and put the ABS front cover back on the unit.

PROPER INSTALLATION SPOTS

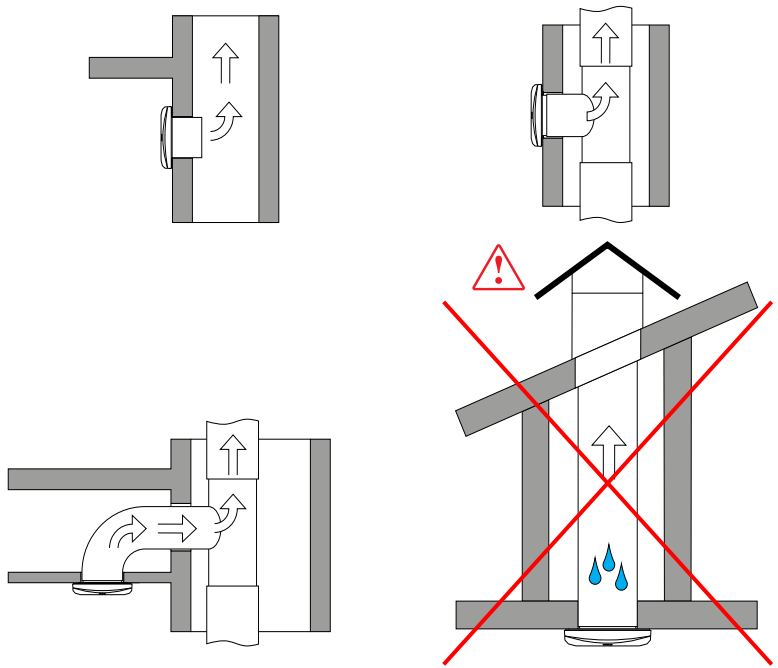

Electrical Diagram

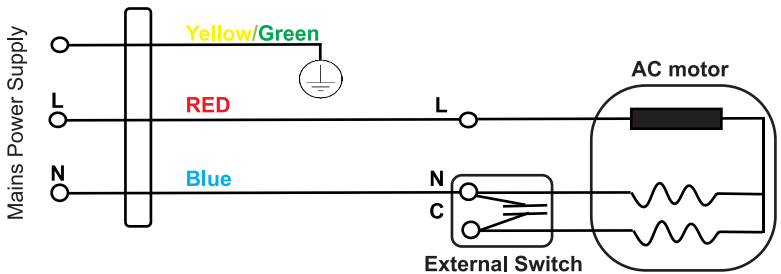

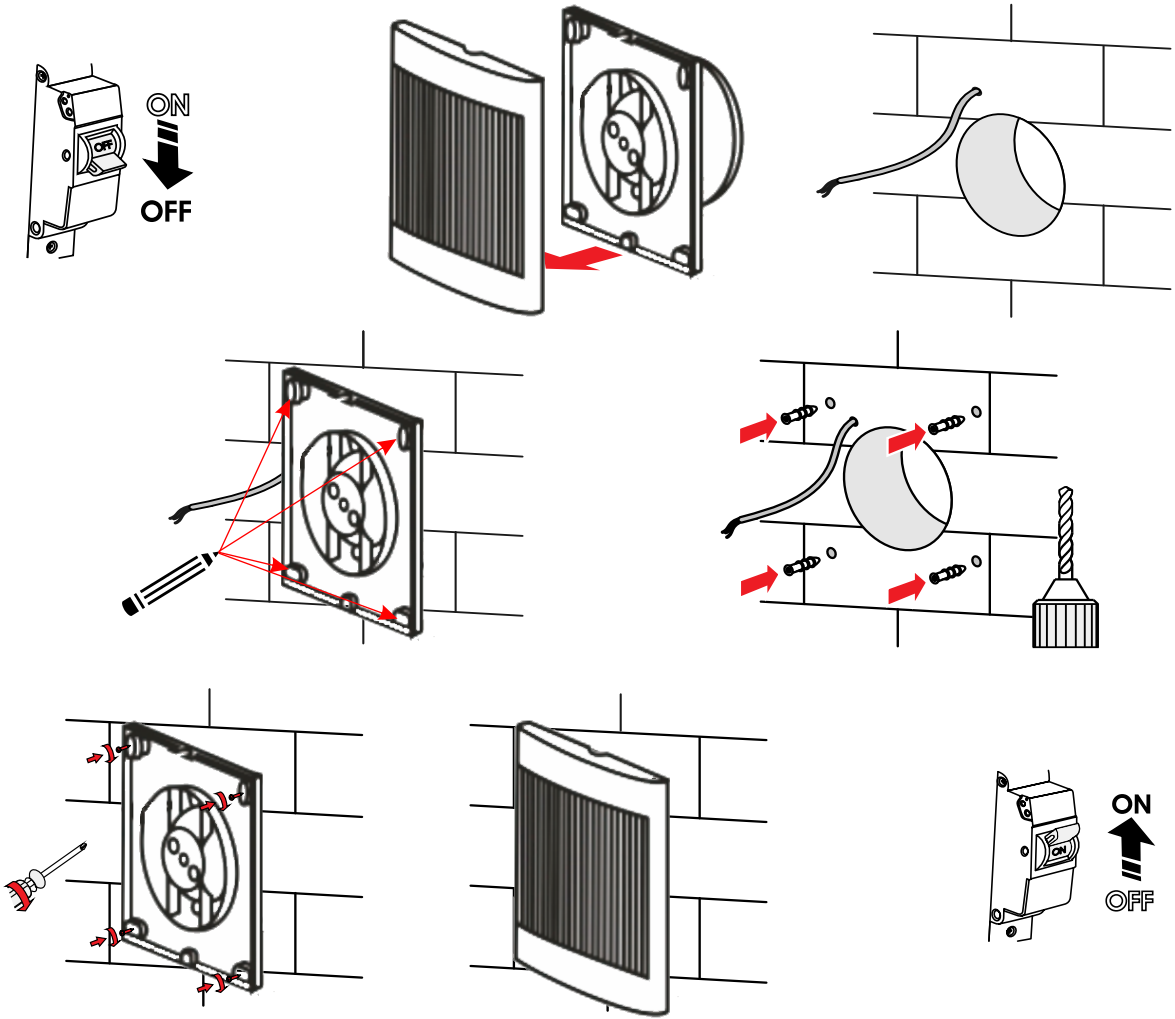
ON
OFF
ON
OFF

TECHNICAL MAINTENANCE

The fan's maintenance takes place at least every 6 months.

Follow the maintenance steps bellow:

- Disconnect the fan from power supply and make sure electricity has been turned off.
- Remove the front ABS cover, wipe the fan with a dry cloth or a brush.
- Rinse the front ABS cover with plenty of water.
- Wipe the rest unit with a mild moisture clothe and let it fully dry.
- Place back the front ABS cover on the exhaust fan and re-connet the power supply cord.

CAUTION! *Do not allow water or liquid come into contact with electric components!*

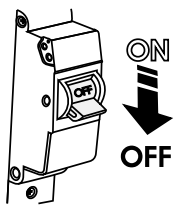

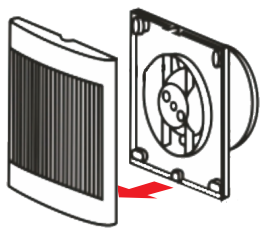

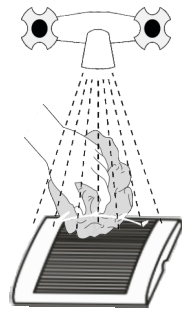

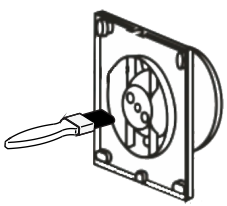

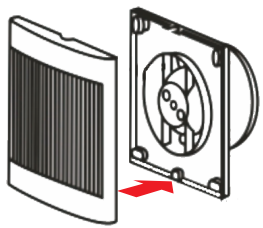

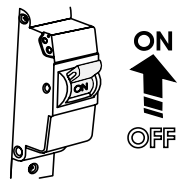

STORAGE AND TRANSPORTATION REGULATIONS

- Store the unit in the manufacturer's original packaging box in a dry closed ventilated premise with temperature range from +5 °C to + 40 °C and relative humidity up to 70 %.
- Storage environment must not contain aggressive vapours and chemical mixtures provoking corrosion, insulation, and sealing deformation.
- Use suitable hoist machinery for handling and storage operations to prevent possible damage to the unit.
- Follow the handling requirements applicable for the particular type of cargo.
- The unit can be carried in the original packaging by any mode of transport provided proper protection against precipitation and mechanical damage.
- The unit must be transported only in the working position.
- Avoid sharp blows, scratches, or rough handling during loading and unloading.

MANUFACTURER'S WARRANTY

The product is in compliance with EU norms and standards.
We hereby declare that the product complies with the following standards for CE-marking and ROHS marking:

- EN IEC 55014-1:2021, EN IEC 61000-3-2:2019+A1:2021, EN 61000-3-3:2013+A1:2019+A2:2021, EN IEC 55014-2:2021.
- ROHS Directive (EU) 2015/863 amending Annex II to Directive 2011/65/EU.
-

The manufacturer hereby warrants normal operation of the unit for 36 months after the retail sale date provided the user's observance of the transportation, storage, installation, and operation regulations. Should any malfunctions occur in the course of the unit operation through the Manufacturer's fault during the guaranteed period of operation, the user is entitled to get all the faults eliminated by the manufacturer by means of replacing with a new one free of charge.

The warranty does not include:

- routine technical maintenance
- unit installation/dismantling
- unit setup

To benefit from warranty repair, the user must provide the unit, the user's manual with the purchase date stamp, and the payment paperwork certifying the purchase. The unit model must comply with the one stated in the user's manual. *Contact the retailer for warranty service.*

The manufacturer's warranty does not apply to the following cases:

- User's failure to submit the unit with the entire delivery package as stated in the user's manual including submission with missing component parts previously dismounted by the user.
- Mismatch of the unit model and the brand name with the information stated on the unit packaging and in the user's manual.
- User's failure to ensure timely technical maintenance of the unit.
- External damage to the unit casing (excluding external modifications as required for installation) and internal components caused by the user.
- Redesign or engineering changes to the unit.
- Replacement and use of any assemblies, parts and components not approved by the manufacturer.
- Unit misuse.
- Violation of the unit installation regulations by the user.
- Violation of the unit control regulations by the user.
- Unit connection to power mains with a voltage different from the one stated in the user's manual.
- Unit breakdown due to voltage surges in power mains.

- Discretionary repair of the unit by the user.
- Unit repair by any persons without the manufacturer's authorization.
- Expiration of the unit warranty period.
- Violation of the unit transportation regulations by the user.
- Violation of the unit storage regulations by the user.
- Wrongful actions against the unit committed by third parties.
- Unit breakdown due to circumstances of insuperable force (fire, flood, earthquake, war, hostilities of any kind, blockades).
- Missing seals if provided by the user's manual.
- Failure to submit the user's manual with the unit purchase date stamp.
- Missing payment paperwork certifying the unit purchase.

(Details / Stamp) of Installer

Installation Date ..... / ..... / .....